Work Order ID 65635

January 20, 2011 1:22:05 PM

Item ID: D3913-041 **Accept** **Setup Start**

Revision ID: **Stop**

Item Name: Long Basket Base Assemby, 350

Start Date: 1/20/11 **Start Qty:** 1.00 **Cust Item ID:**

Required Date: 2/04/11 **Req'd Qty:** 1.00 **Customer:**

Reference:

Approvals: **Process Plan:** _____ **Date:** _____ **Tooling:** _____ **Date:** _____ **Run Start**

QC: _____ **Date:** _____ **SPC (Y/N):** _____ **Date:** _____ **Stop**

Sequence ID/ Work Center ID	Operation Description	Set Up/ Run Hours	Tool ID	Tool #	Plan Code	Accept Qty	Reject Qty	Reject Number	Insp. Stamp
Draw Nbr	**Revision Nbr**								
D3913	A								
100	Weld per dwg A/R S.S. rod Batch: M115778	0.00							
Large Fab	Large Fab								
Large Fab	**Memo**	0.00							
Large Fab	1- assemble ribs , weld as per dwg D3913 using DT9610A ***inspect before welding mesh*** 2- tack weld mesh on basket as per dwg D3913 and trim mesh to fit if necessary and trim to clear fasteners holes on the ends 3- weld hinge (3) and Mounting brackets as per dwg D3913 ***take lid to locate hinge and bracket***								
110	QC9- Inspect visual per QSI004- Fusion Welds	0.00							
QC	**Memo**	0.00							
Quality Control									

Cut and (A4020-1)

11.07-08

QC 11-07-11

Work Order ID 65635

January 20, 2011 1:22:05 PM

Item ID: D3913-041 **Accept** **Setup Start**

Revision ID: **Stop**

Item Name: Long Basket Base Assemby, 350

Start Date: 1/20/11 **Start Qty:** 1.00 **Cust Item ID:**

Required Date: 2/04/11 **Req'd Qty:** 1.00 **Customer:**

Reference:

Approvals: **Process Plan:** _____ **Date:** _____ **Tooling:** _____ **Date:** _____ **Run Start**

QC: _____ **Date:** _____ **SPC (Y/N):** _____ **Date:** _____ **Stop**

Sequence ID/ Work Center ID	Operation Description	Set Up/ Run Hours	Tool ID	Tool #	Plan Code	Accept Qty	Reject Qty	Reject Number	Insp. Stamp
120	QC6- Inspect dimensions to drawing	0.00							
QC	Memo	0.00							
Quality Control									
125	Pressure Wash per QSI005 4.3	0.00							
HandFinish	Memo	0.00							
Hand Finishing									

5 11/07/12

EO

IX 11/07/12

Work Order ID 65635

January 20, 2011 1:22:11 PM

Item ID: D3913-041 **Accept** **Setup Start**

Revision ID: **Stop**

Item Name: Long Basket Base Assemby, 350

Start Date: 1/20/11 **Start Qty:** 1.00 **Cust Item ID:**

Required Date: 2/04/11 **Req'd Qty:** 1.00 **Customer:**

Reference:

Approvals: **Process Plan:** _____ **Date:** _____ **Tooling:** _____ **Date:** _____ **Run Start**

QC: _____ **Date:** _____ **SPC (Y/N):** _____ **Date:** _____ **Stop**

Sequence ID/ Work Center ID	Operation Description	Set Up/ Run Hours	Tool ID	Tool #	Plan Code	Accept Qty	Reject Qty	Reject Number	Insp. Stamp
130	White Gloss(Ref:4.3.5.2) per QSI005 4.3-Steel	0.00							
Powdercoat	**Memo**	0.00							
Powder Coating	1- Plug holes and mask only interior of hinge (3) prior to powder coat								
	1ST COAT: START TIME: 3:45 OVEN TEMPERATURE: 400 0F FINISH TIME: 4:15 ********** 2nd coat if necessary ********** 2ND COAT: START TIME: _____ OVEN TEMPERATURE: _____ FINISH TIME: _____								
140	QC3- Inspect Part Finish	0.00							
QC	**Memo**	0.00							
Quality Control									

M117745

IX J M 11/07/12

1 BK 11-7-12

Work Order ID 65635

January 20, 2011 1:22:11 PM

Item ID: D3913-041 **Accept** **Setup Start**

Revision ID: **Stop**

Item Name: Long Basket Base Assemby, 350

Start Date: 1/20/11 **Start Qty:** 1.00 **Cust Item ID:**

Required Date: 2/04/11 **Req'd Qty:** 1.00 **Customer:**

Reference:

Approvals: **Process Plan:** _____ **Date:** _____ **Tooling:** _____ **Date:** _____ **Run Start**

QC: _____ **Date:** _____ **SPC (Y/N):** _____ **Date:** _____ **Stop**

Sequence ID/ Work Center ID	Operation Description	Set Up/ Run Hours	Tool ID	Tool #	Plan Code	Accept Qty	Reject Qty	Reject Number	Insp. Stamp
150	Assemble as per dwg	0.00							
HandFinish	**Memo**	0.00							
Hand Finishing	Pick Kit								
160	QC5- Inspect part completeness to step on W/O	0.00							
QC	**Memo**	0.00							
Quality Control									
170	Identify as per dwg & Stock Location: 6-A	0.00							
Packaging	**Memo** w/o 65605	0.00							
Packaging									

11/07/13

8/16/13

11/07/13

Work Order ID 65635

January 20, 2011 1:22:17 PM

Item ID: D3913-041 **Accept** **Setup Start**

Revision ID:

Item Name: Long Basket Base Assemby, 350 **Stop**

Start Date: 1/20/11 **Start Qty:** 1.00 **Cust Item ID:**

Required Date: 2/04/11 **Req'd Qty:** 1.00 **Customer:**

Reference:

Approvals: **Process Plan:** _____ **Date:** _____ **Tooling:** _____ **Date:** _____ **Run Start**

QC: _____ **Date:** _____ **SPC (Y/N):** _____ **Date:** _____ **Stop**

Sequence ID/ Work Center ID	Operation Description	Set Up/ Run Hours	Tool ID	Tool #	Plan Code	Accept Qty	Reject Qty	Reject Number	Insp. Stamp
180	QC21- Final Inspection - Work Order Release	0.00						11/7/14	
QC Quality Control	**Memo**	0.00							

MF
11-07-14

Picklist Print

January 20, 2011 1:22:00 PM

6

Work Order ID: 65635

Parent Item: D3913-041

Parent Item Name: Long Basket Base Assemby, 350

Start Date: 1/20/11 **Required Date:** 2/04/11

Start Qty: 1.00 **Required Qty:** 1.00

Comments: IPP Rev:A new issue DD 10.03.19 verified by:EC IPP Rev:B
chg qty's DD 10.04.12 verified by:EC

Component Item ID/ Item Name	Replacement Item ID	Mfg/ Purch	Bin Item	Primary Location	Last Location	Route Seq ID	Unit of Measure	Qty on Hand	Qty per Kit	Total Qty	Qty Issued	Date Issued	Status
AN3-10A Bolt		Purchased	No			150	Each	127.0000	6	6	6	11/07/13	
				Location		**Loc Qty**		**Loc Code**					
				ST351		127							
					115877	1							
					116075	26							
					116400	100							
AN960JD8 Washer	NAS1149DN832J	Purchased	No			150	Each	10.0000	2	2	2	11/07/13	
				Location		**Loc Qty**		**Loc Code**					
				ST347		10							
					105059	10							
D2581 Mounting Bracket		Manufactured	No			100	Each	33.0000	2	2	2	11.07.07	
				Location		**Loc Qty**		**Loc Code**					
				WA		33							
					64112	20							
					64425	13							

4 M117316 2

M117313 6

B69739 → 2

Picklist Print

January 20, 2011 1:22:00 PM

Work Order ID: 65635

Parent Item: D3913-041

Parent Item Name: Long Basket Base Assemby, 350

Start Date: 1/20/11 **Required Date:** 2/04/11

Start Qty: 1.00 **Required Qty:** 1.00

D2931	Manufactured	No	150	Each	738.0000	2	2	11/07/12
Bumper								

Location	Loc Qty	Loc Code	
ST504	738		
46064	738		2

D3913-1	Manufactured	No	100	Each	3.0000	1	1	SAD 11-06-25
Rib								

Location	Loc Qty	Loc Code	
WA	3		
64467	3	B54089 →	1

D3913-15	Manufactured	No	100	Each	5.0000	1	1	SAD 11-06-25
Wide Handle Plate								

Location	Loc Qty	Loc Code	
WA	5	B69012 →	1
63627	1		
64900	4		

D3913-3	Manufactured	No	100	Each	4.0000	1	1	SAD 11-06-25
Rib								

Location	Loc Qty	Loc Code	
WA	4	B69160	1
64107	1		
65314	3		

Picklist Print

January 20, 2011 1:22:01 PM

Work Order ID: 65635

Parent Item: D3913-041

Parent Item Name: Long Basket Base Assemby, 350

Start Date: 1/20/11 **Required Date:** 2/04/11

Start Qty: 1.00 **Required Qty:** 1.00

D3913-7	Manufactured	No	100	Each	10.0000	2	2	SAD 11-06-25
Rib								

Location	Loc Qty	Loc Code	
WA	10	B69521	1
60263	4		
65278	6		

D3913-9	Manufactured	No	100	Each	4.0000	1	1	SAD 11-06-25
Hinge Rib								

Location	Loc Qty	Loc Code	
WA	4	B68590	1
63770	1		
65315	3		

D3916-041	Manufactured	No	100	Each	0.0000	2	2	SAD 11-06-25
Rib Assembly			B69161 X2					
D3916-5	Manufactured	No	100	Each	7.0000	3	3	SAD 11-06-25
Light Rib								

Location	Loc Qty	Loc Code	
WA	7	B59088	3
57023	1		
64167	6		

D4016-1	Manufactured	No	100	Each	1.0000	3	3	SAD 11-06-25
Hinge Half, Base								

Location	Loc Qty	Loc Code	
WA	1	B68926	3
64264	1		

Picklist Print

January 20, 2011 1:22:02 PM

Work Order ID: 65635

Parent Item: D3913-041

Parent Item Name: Long Basket Base Assemby, 350

Start Date: 1/20/11 **Required Date:** 2/04/11

Start Qty: 1.00 **Required Qty:** 1.00

D4017-7	Manufactured	No	100	Each	5.0000	1	1	SAD 11.06-25
Rib								

Location	Loc Qty	Loc Code
WA	5	B69730 ①
58929	2	
64681	3	

D4017-9	Manufactured	No	100	Each	4.0000	2	2	SAD 11-06-25
Rib								

Location	Loc Qty	Loc Code
WA	4	B70341 ②
64682	4	

D4020-1	Manufactured	No	100	Each	0.0000	1	1	
Mesh (350 Basket Long, Base)								

11.07.15 N/A

D4020-11	Manufactured	No	100	Each	8.0000	2	2	11.06.25
End Mesh, Basket								

Location	Loc Qty	Loc Code
WA	8	
59413	1	
61306	1	
64923	6	

69648 ②

M304EX0.75-16F M118153 33SF 11.06.25

Picklist Print

January 20, 2011 1:22:03 PM

Work Order ID: 65635

Parent Item: D3913-041

Parent Item Name: Long Basket Base Assemby, 350

Start Date: 1/20/11 **Required Date:** 2/04/11

Start Qty: 1.00 **Required Qty:** 1.00

D4021-1	Manufactured	No	100	Each	15.0000	3	3	
Handle Plate								

B69518 (3) 11.07.07

Location	Loc Qty	Loc Code
ST109	5	
57086	5	
WA	10	
64136	1	
64903	9	

D4021-5	Manufactured	No	150	Each	10.0000	2	2	
Blanking Plate								

11/07/13

B70349 (2x)

Location	Loc Qty	Loc Code
ST112	10	
64243	10	

D4034-041	Manufactured	No	100	Each	2.0000	1	1	
Aft Upper Rib Assembly								

B69157 (1) 11.07.07

Location	Loc Qty	Loc Code
WA	2	
64904	2	

D4034-043	Manufactured	No	100	Each	0.0000	1	1	
Fwd Upper Rib Assembly								

B70241 (1) 11.07.07

MS20600-AD4W3	Purchased	No	150	Each	1,339.000	2	2	
Cherry Rivets								

11/07/13

M117505 (2)

Location	Loc Qty	Loc Code
ST321	1339	
107939	754	
111636	585	

Picklist Print

January 20, 2011 1:22:03 PM

Work Order ID: 65635

Parent Item: D3913-041

Parent Item Name: Long Basket Base Assemby, 350

Start Date: 1/20/11 **Required Date:** 2/04/11

Start Qty: 1.00 **Required Qty:** 1.00

MS21042L3	Purchased	No	150	Each	3,115.000	6	6	11/07/13
Nut								

Location	Loc Qty	Loc Code
ST300	3115	
114784	9	
115835	606	
116391	900	
116540	800	
116549	800	

M117885 (6)

NAS1149F0332P	Purchased	No	150	Each	298.0000	12	12	11/07/13
WASHER								

Location	Loc Qty	Loc Code
ST275	298	
18057	298	

M117735 (12)

ITEM	QTY -041	P/N	DESCRIPTION
	X	D3913-041	LONG BASKET BASE ASSY (350)
1	1	D3913-101	TUBULAR ASSY (350 SHORT BASKET)
2	1	D3913-15	WIDE HANDLE PLATE
3	2	D2581	MOUNTING BRACKET
4	2	D2931	BUMPER
5	3	D4016-1	HINGE HALF, BASE
6	1	D4020-1	MESH (350 BASKET LONG BASE)
7	2	D4020-11	END MESH, BASKET
8	3	D4021-1	HANDLE PLATE
9	2	D4021-5	BLANKING PLATE
10	6	AN3-10A	BOLT
11	2	AN960JD8	WASHER
12	2	MS20600AD4W3	BLIND RIVET
13	6	MS21042L3	NUT
14	12	NAS1149F0332P	WASHER

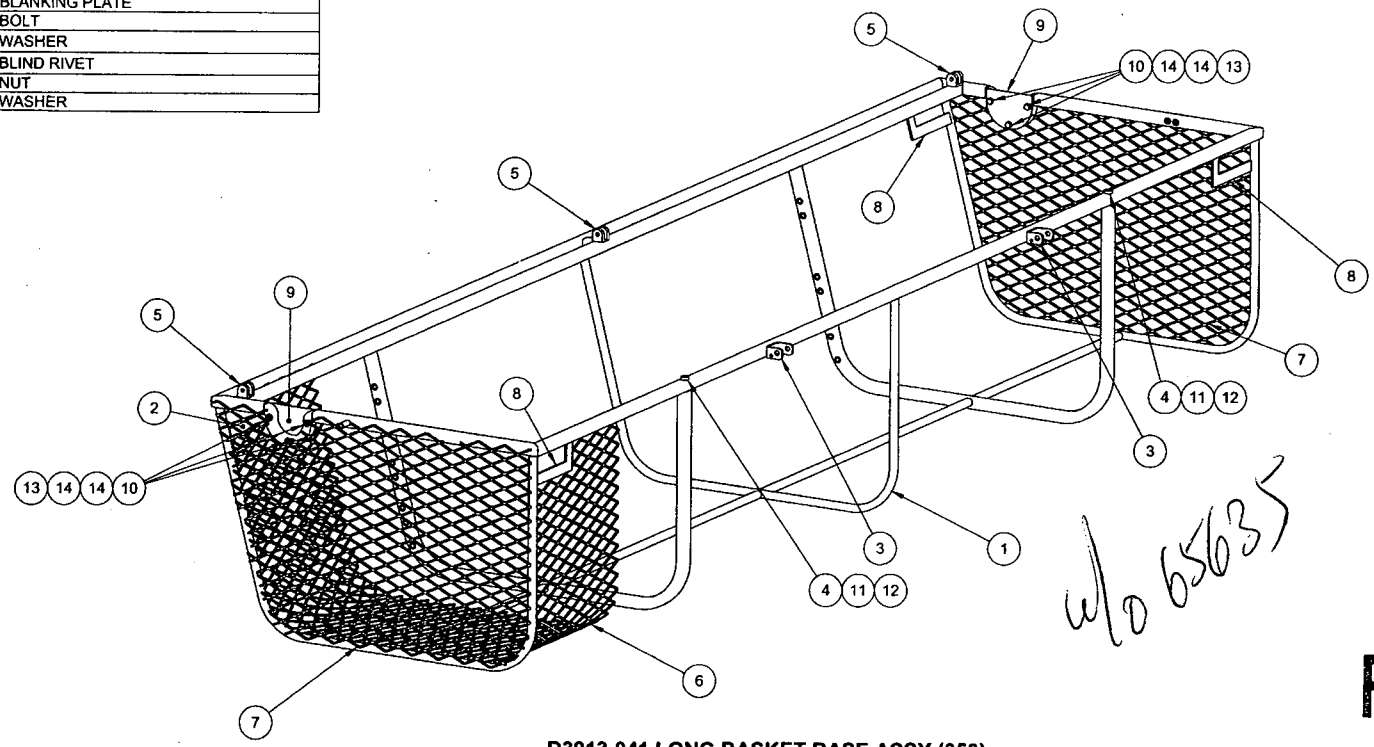

w/o 65635

RELEASED
2010 -03- 2 2

D3913-041 LONG BASKET BASE ASSY (350)
(MESH SHOWN LOCALLY FOR CLARITY)

NOTES:
1) MATERIAL: N/A
2) FINISH: POWDER COAT WHITE (4.3.5.2) PER DART QSI 005 4.3
3) TOLERANCES: PER DART QSI 018 UNLESS OTHERWISE NOTED
4) UNITS: INCHES UNLESS OTHERWISE NOTED
5) BREAK SHARP EDGES: N/A
6) IDENTIFICATION: NONE
7) WEIGHT: 43.3 lbs APPROX
8) INSTALL AFTER FINISH
9) MASK HOLES PRIOR TO POWDER COAT
10) WELD PER DART QSI 004

REV.	DESCRIPTION	BY	DATE
A	NEW ISSUE	JPH	10.03.16

DESIGN	AJS	DART AEROSPACE LTD HAWKESBURY, ONTARIO, CANADA
DRAWN	JPH	
CHECKED		DRAWING NO. D3913 — REV. A — SHEET 1 OF 6
MFG. APPR.		
APPROVED		TITLE: LONG BASKET BASE ASSY (350) — SCALE: NTS
DE APPR.		
DATE	10.03.16	

COPYRIGHT © 2010 BY DART AEROSPACE LTD
THIS DOCUMENT IS PRIVATE AND CONFIDENTIAL AND IS SUPPLIED ON THE EXPRESS CONDITION THAT IT IS NOT TO BE USED FOR ANY PURPOSE OR COPIED OR COMMUNICATED TO ANY OTHER PERSON WITHOUT WRITTEN PERMISSION FROM DART AEROSPACE LTD.

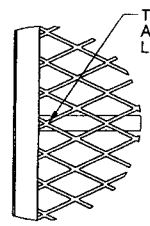

DETAIL C D7-2

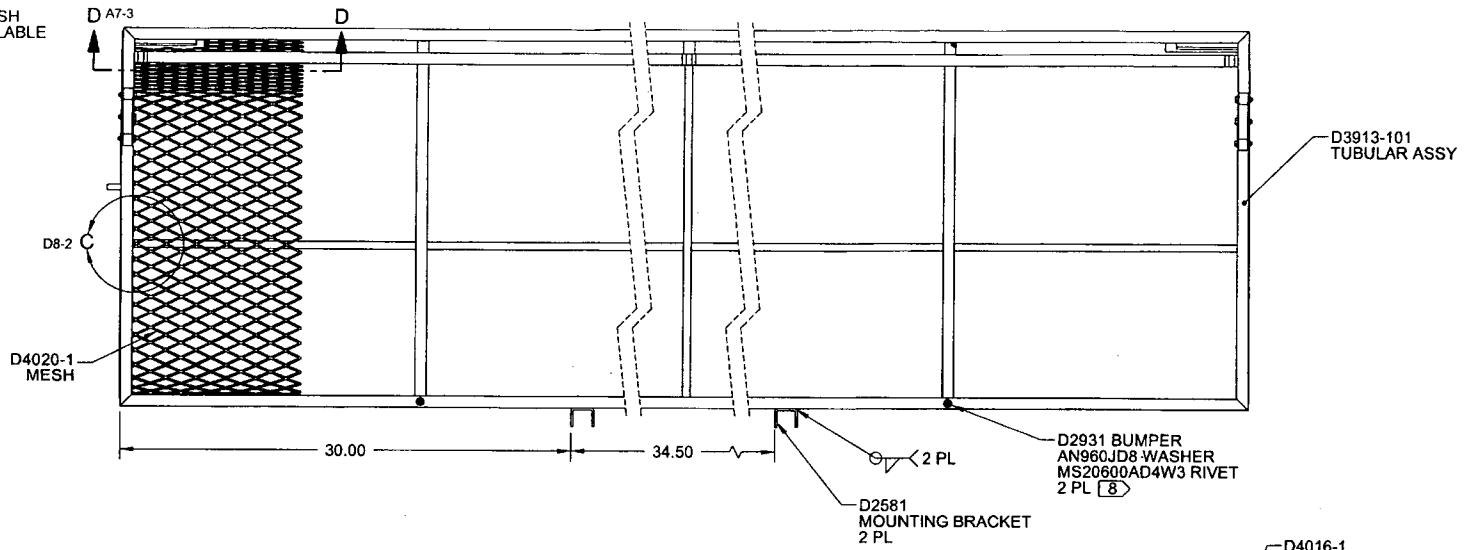

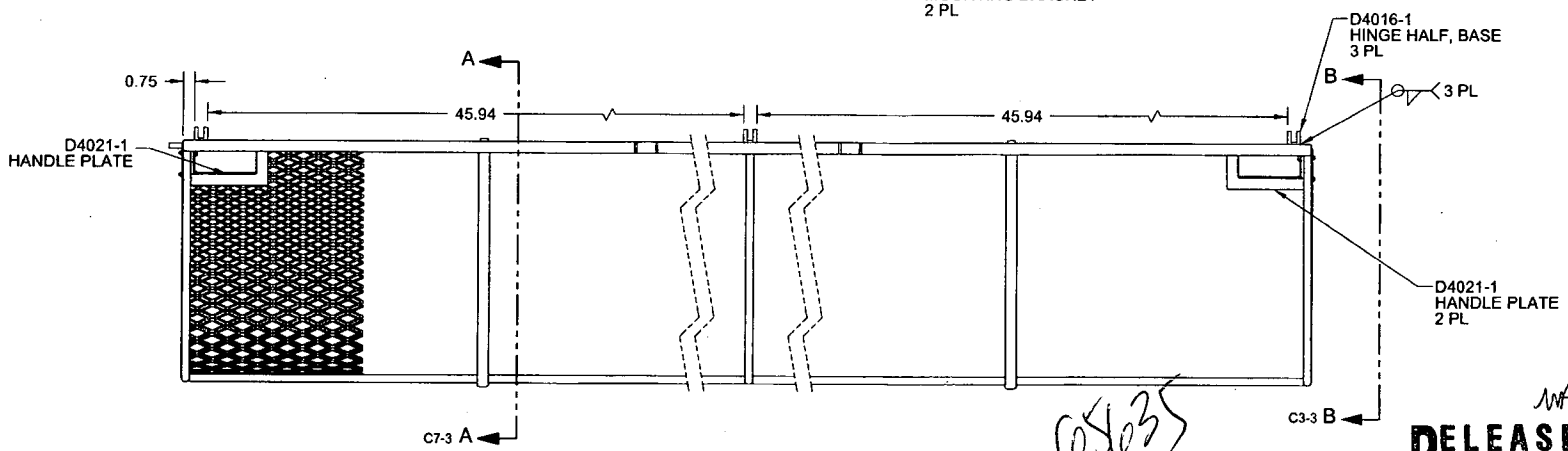

D3913-041 LONG BASKET BASE ASSY (350)
(MESH SHOWN LOCALLY FOR CLARITY)

05635

RELEASED
2010 -09- 22

DESIGN	AJS	**DART AEROSPACE LTD** HAWKESBURY, ONTARIO, CANADA
DRAWN	JRH	
CHECKED		DRAWING NO. D3913 — REV. A — SHEET 2 OF 6
MFG. APPR.		
APPROVED		TITLE: LONG BASKET BASE ASSY (350) — SCALE: NTS
DE APPR.		
DATE	10.03.16	

COPYRIGHT © 2010 BY DART AEROSPACE LTD
THIS DOCUMENT IS PRIVATE AND CONFIDENTIAL AND IS SUPPLIED ON THE EXPRESS CONDITION THAT IT IS NOT TO BE USED FOR ANY PURPOSE OR COPIED OR COMMUNICATED TO ANY OTHER PERSON WITHOUT WRITTEN PERMISSION FROM DART AEROSPACE LTD.

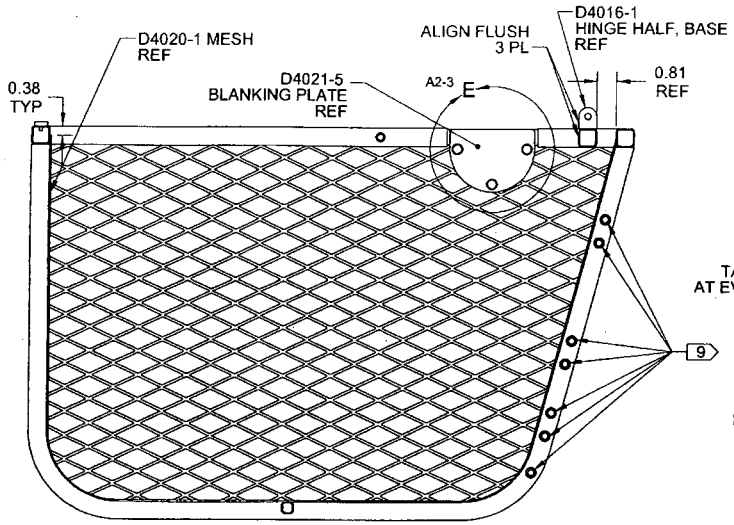

SECTION A-A A5-2

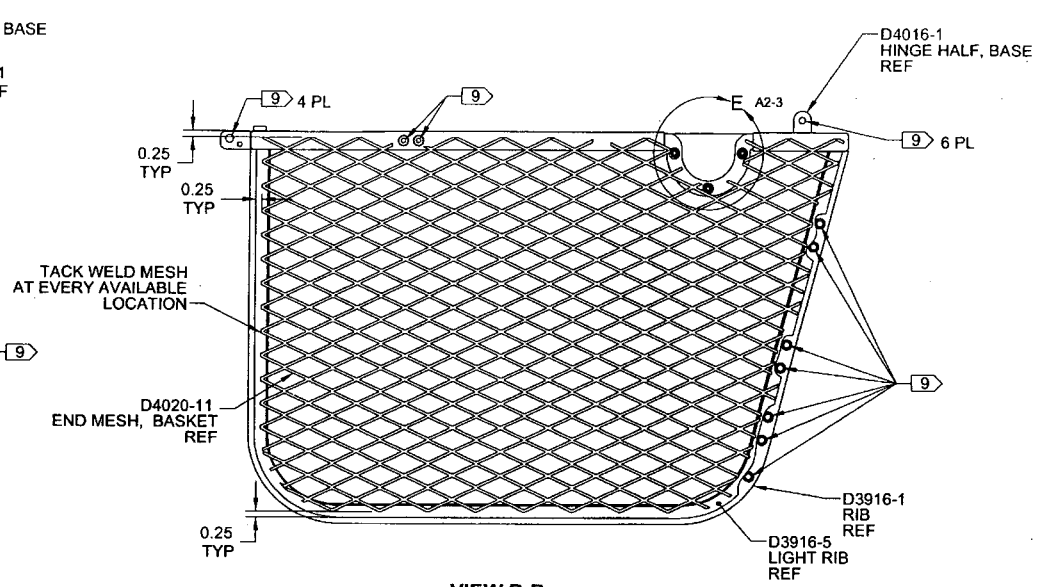

VIEW B-B A2-2

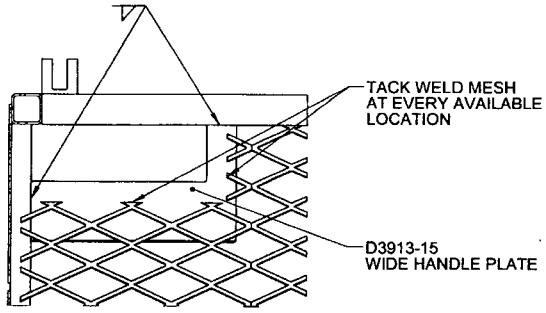

SECTION D-D D7-2
TYPICAL FOR ALL
HANDLE PLATES

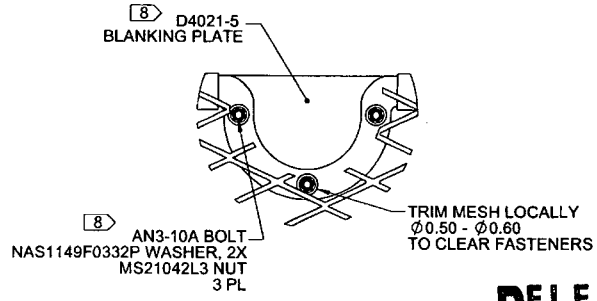

DETAIL E D2-3
D6-3

RELEASED
2010-03-22

65635

DESIGN	AJS	**DART AEROSPACE LTD** HAWKESBURY, ONTARIO, CANADA
DRAWN	JRH	
CHECKED		DRAWING NO. D3913 — REV. A — SHEET 3 OF 6
MFG. APPR.		
APPROVED		TITLE: LONG BASKET BASE ASSY (350) — SCALE: NTS
DE APPR.		
DATE	10.03.16	

COPYRIGHT © 2010 BY DART AEROSPACE LTD
THIS DOCUMENT IS PRIVATE AND CONFIDENTIAL AND IS SUPPLIED ON THE EXPRESS CONDITION THAT IT IS NOT TO BE USED FOR ANY PURPOSE OR COPIED OR COMMUNICATED TO ANY OTHER PERSON WITHOUT WRITTEN PERMISSION FROM DART AEROSPACE LTD.

ITEM	QTY -101	P/N	DESCRIPTION
	X	D3913-101	TUBULAR ASSY (350 LONG BASKET)
1	1	D3913-1	RIB
2	1	D3913-3	RIB
3	2	D3913-7	RIB
4	1	D3913-9	HINGE RIB
5	3	D3916-5	LIGHT RIB
6	2	D3916-041	RIB ASSY
7	1	D4017-7	RIB
8	2	D4017-9	RIB
9	1	D4034-041	AFT UPPER RIB ASSY
10	1	D4034-043	FWD UPPER RIB ASSY

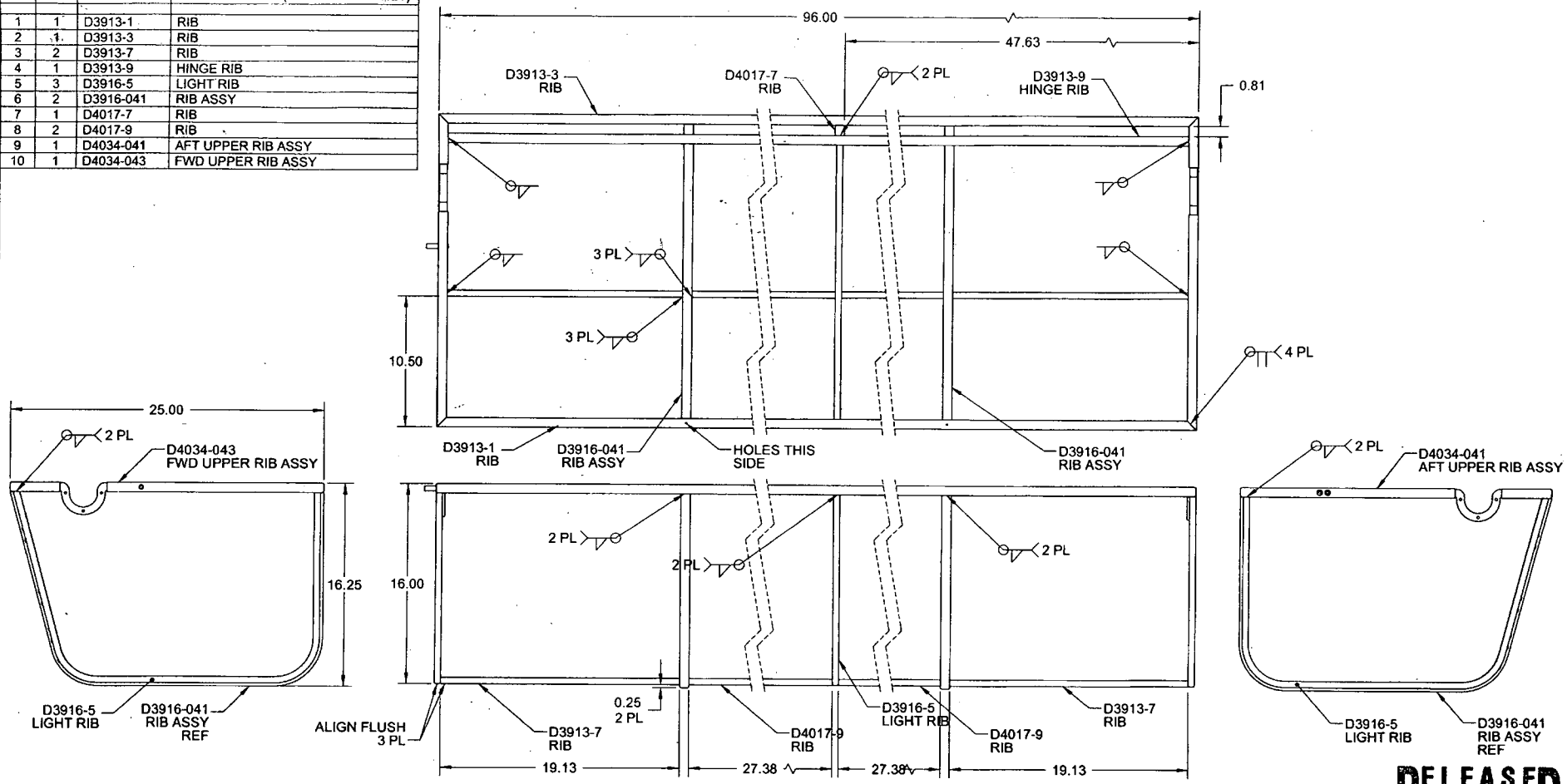

8 **D3913-101 TUBULAR ASSY (350 SHORT BASKET)**

RELEASED
2010 -03- 22

NOTES:
1) MATERIAL: N/A
2) FINISH: NONE
3) TOLERANCES: PER DART QSI 018 UNLESS OTHERWISE NOTED
4) UNITS: INCHES UNLESS OTHERWISE NOTED
5) BREAK SHARP EDGES: 0.005 TO 0.010 MAX
6) IDENTIFICATION: N/A
7) WEIGHT: 22.53 lbs
8) TOLERANCE FOR ~~XX, XX~~ DIMENSIONS ±0.06 FOR D3913-101
9) WELD PER DART QSI 004

05635

DESIGN	AJS	DART AEROSPACE LTD HAWKESBURY, ONTARIO, CANADA
DRAWN	JPH	
CHECKED		DRAWING NO. D3913 — REV. A — SHEET 4 OF 6
MFG. APPR.		
APPROVED		TITLE: LONG BASKET BASE ASSY (350) — SCALE: NTS
DE APPR.		
DATE	10.03.16	

COPYRIGHT © 2010 BY DART AEROSPACE LTD
THIS DOCUMENT IS PRIVATE AND CONFIDENTIAL AND IS SUPPLIED ON THE EXPRESS CONDITION THAT IT IS NOT TO BE USED FOR ANY PURPOSE OR COPIED OR COMMUNICATED TO ANY OTHER PERSON WITHOUT WRITTEN PERMISSION FROM DART AEROSPACE LTD

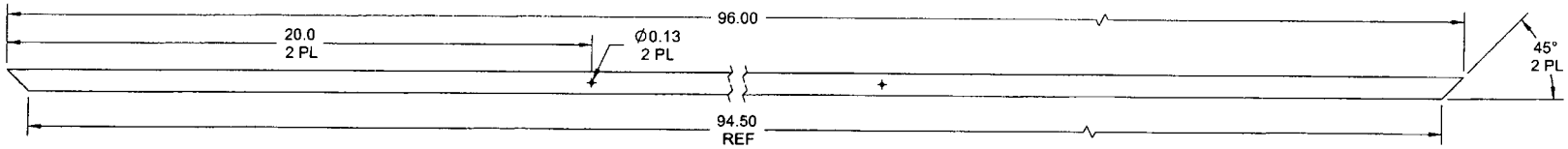

D3913-1 RIB

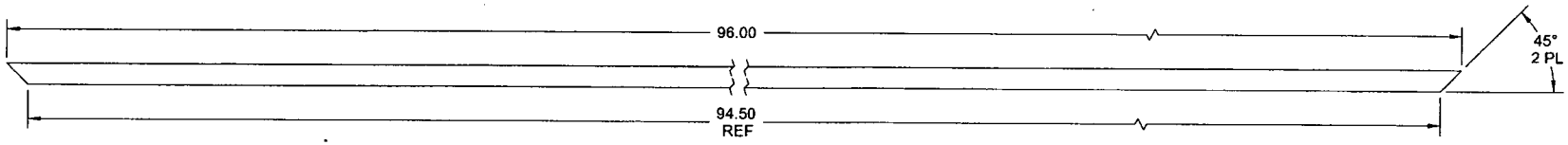

D3913-3 RIB

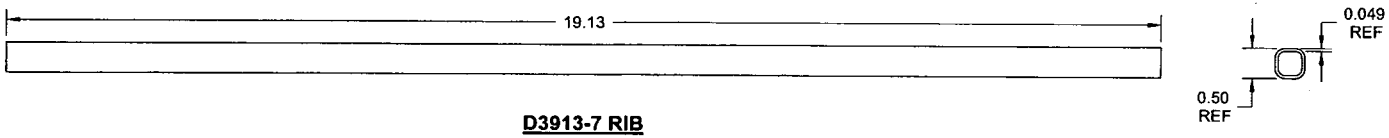

D3913-7 RIB

D3913-9 HINGE RIB

NOTES:
1) MATERIAL -1, -3, -9: AISI 304/316 STAINLESS STEEL SQUARE TUBE, 0.75 X 0.75 X 0.049 WALL
REF DART SPEC. M304TS0.750W.049

-7: AISI 304/316 STAINLESS STEEL SQUARE TUBE, 0.50 X 0.50 X 0.049 WALL
REF DART SPEC. M304TS0.500W.049

2) FINISH: NONE
3) TOLERANCES: PER DART QSI 018 UNLESS OTHERWISE NOTED
4) UNITS: INCHES UNLESS OTHERWISE NOTED
5) BREAK SHARP EDGES: 0.005 TO 0.010 MAX
6) IDENTIFICATION: N/A
7) WEIGHT: SEE ASSEMBLED WEIGHTS

RELEASED
2010 -03- 2 2

68635

DESIGN	AJS	DART AEROSPACE LTD HAWKESBURY, ONTARIO, CANADA
DRAWN	JPH	
CHECKED		DRAWING NO. D3913 — REV. A — SHEET 5 OF 6
MFG. APPR.		
APPROVED		TITLE — SCALE
DE APPR.		LONG BASKET BASE ASSY (350) — NTS
DATE	10.03.16	

COPYRIGHT © 2010 BY DART AEROSPACE LTD
THIS DOCUMENT IS PRIVATE AND CONFIDENTIAL AND IS SUPPLIED ON THE EXPRESS CONDITION THAT IT IS NOT TO BE USED FOR ANY PURPOSE OR COPIED OR COMMUNICATED TO ANY OTHER PERSON WITHOUT WRITTEN PERMISSION FROM DART AEROSPACE LTD.

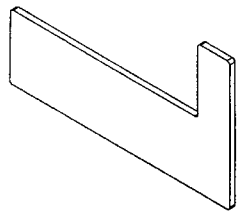

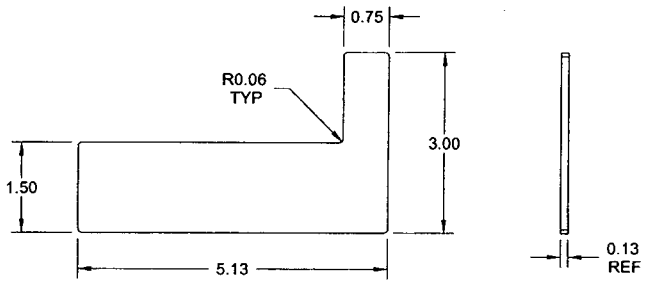

D3913-15 WIDE HANDLE PLATE

RELEASED
2010 -03- 22

NOTES:
1) MATERIAL: 304/316 STAINLESS STEEL SHEET ANNEALED 2B FINISH,
PER MIL-S-5059 OR AMS 5513/5524 OR ASTM A240 OR ASME SA240
REF DART SPEC M304S11GA
2) FINISH : NONE
3) TOLERANCES: PER DART QSI 018 UNLESS OTHERWISE NOTED
4) UNITS: INCHES UNLESS OTHERWISE NOTED
5) BREAK SHARP EDGES: 0.005 TO 0.010 MAX
6) IDENTIFICATION: N/A
7) WEIGHT: 0.31 lbs

65635

DESIGN	AJS	**DART AEROSPACE LTD** HAWKESBURY, ONTARIO, CANADA
DRAWN	JPH	
CHECKED		DRAWING NO. D3913 REV. A
MFG. APPR.		SHEET 6 OF 6
APPROVED		TITLE LONG BASKET BASE ASSY (350) SCALE NTS
DE APPR.		
DATE 10.03.16		

COPYRIGHT © 2010 BY DART AEROSPACE LTD
THIS DOCUMENT IS PRIVATE AND CONFIDENTIAL AND IS SUPPLIED ON THE EXPRESS CONDITION THAT IT IS NOT TO BE USED FOR ANY PURPOSE OR COPIED OR COMMUNICATED TO ANY OTHER PERSON WITHOUT WRITTEN PERMISSION FROM DART AEROSPACE LTD.